ASKO Logic Dishwasher

D5554XXLFI

Type: Fully integrated
Colors: Fully Integrated (FI) model accommodates a selection of accessory door panels or customer supplied custom wood panel.

PERFORMANCE

Capacity: 17 place settings
Noise level 46 dB(A)
9Spray™ System, PowerZone™ Pots & Pans, PowerZone™ Plate, PowerZone™ Cutlery

PROGRAMS

Time	Heavy	Normal
Daily	Quick	Super Quick
Delicate	Eco	Mixed
Rinse and Dry	Rinse & Hold	
Upper Wash	Lower wash	

Super Quick program in 15 minutes!

FEATURES

7 Temperatures, Turbo drying™, Delayed start 1-24 h, Time set, Time saver, Status Light™, Hidden control, LCD display, Halogen interior light, Front-adjusting rear leg for easy installation, Front-adjusting door springs, Uses as little at 2.6 gals of water in Quick wash, Energy Star rated, 2 year warranty

FLEXIRACKS™

Exclusive upper rack accommodates:
World's only 3 rack, 5 basket dishwasher, 7 1/2" - 9" items, 5 rows of glasses capacity, Fold-down stem-ware shelves, Upper & lower rack handles, Exclusive: World's most usable capacity, Exclusive height-adjust-able upper rack
Exclusive lower rack accommodates:
11 3/8" - 15 1/4" dishes, Fold-down tines for storage flexibility, Wide tine design for large bowls and plat-ters
Middle rack, Cutlery basket

Asko Appliances, Inc
PO BOX 940609 • Plano • Texas • 75094
Phone 800.898.1879
www.askousa.com

Art no: 6301711

PLANNING & DESIGN: XXL DISHWASHERS – PANEL READY

D5524XXLFI, D5534XXLFI, D5554XXLFI, D5894XXLFI

Unit Dimensions

	US	METRIC
HEIGHT:*	33 7/8″ – 36″	860 – 914 mm
WIDTH:	23 5/8″	600 mm
DEPTH:	22 7/8″	581 mm
DEPTH W/DOOR OPEN:	49 ½″	1257 mm
WEIGHT:	94 lbs	43 kg

Technical Data

Electricity	120 V, 60 Hz, 15 Amp
Water pressure	4.2 – 140 psi
Heating element	1200 watt
Max loading	1300 watt

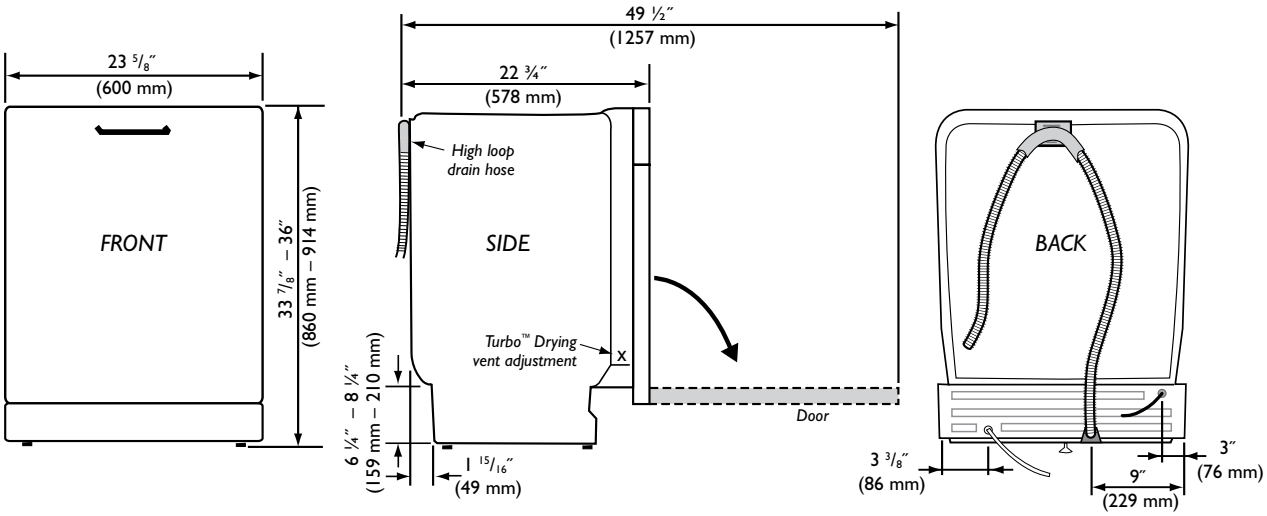

Toe kick reveal height will be the dishwasher installation height minus the door panel height.

Custom Front Panels

The D5524XXLFI, D5534XXLFI, D5554XXLFI and D5894XXLFI can only be installed with a fully-integrated custom door panel that extends from the desired toe kick height to the counter top. A one-piece accessory door panel selection is also available.

Cutout Dimensions

	US	METRIC
HEIGHT:*	33 7/8″ – 36″	860 – 914 mm
WIDTH:	23 5/8″ – 24″	600 – 610 mm
DEPTH:	24″	610 mm

The electrical and water supplies should enter through the area indicated by the shaded area. Preferably, they should come through the right side of the machine. The access hole must be round and smooth and no bigger than 2″ (51 mm) in diameter.

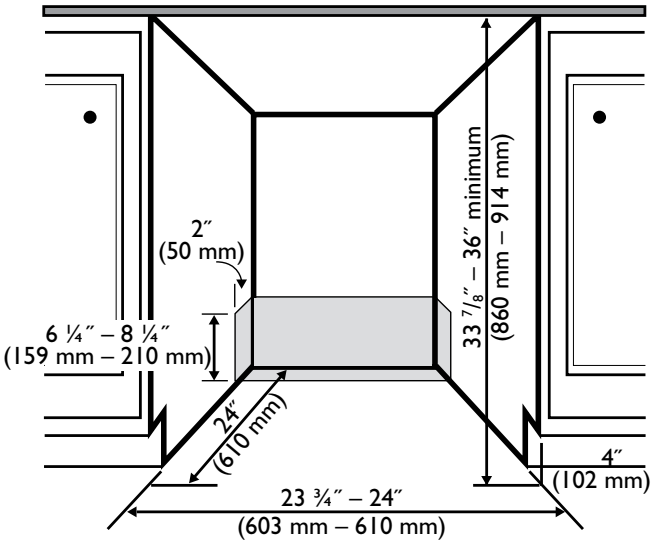

* *If accessory FI fill strips are used, then ½″ (13 mm) must be added to the dishwasher height and cutout. Additionally, 3/8″ (10 mm) must be added to the dishwasher width and cutout width.*

Specifications are subject to change without notice. See installation instructions for additional details.