T793FI

T793FI
Type: Fully Integrated vented dryer Line Series™ Style
Color: Optional accessory door panels in TouchProof™ Stainless Steel, White and Black or consumer supplied custom wood panel

PROGRAMS
Auto extra dry, Auto dry, Auto normal dry, Auto iron dry, Auto jeans, Auto synthetic, Timed dry and Dry fluff

OPTIONS
Anti-Crease, Low temperature, Delay Start (24 hrs) and TimeSaver™ cool down and End of program signal

CAPACITY
UltraCare - family size capacity

ENVIRONMENTAL
Energy efficient, Majority of manufacturing components labelled for recycling and Certified ISO14001 for environmental quality

TECHNOLOGY
Line Series™ Style control with LCD full graphic display, SensiDry-sensor, Butterfly™ drying system, Double lint filter and Cleanable fan

CONSTRUCTION
Stainless Steel drum, Ball bearing suspension, Heavy duty life-tested motor, 62 dB(A) noise level, Galvanized steel base and rear panel

SIMPLICITY/COMFORT
Line Series™ Style control with LCD full graphic display, Program memory, Countdown time display, Drum light, Vents up to 60' & 3-way venting, Stacking kit included, Reversible door and 12 languages

SAFETY
KidSafe – child-safe start option

WARRANTY
Industry leading 2 Plus 1 warranty – up to three years parts and labor protection

2 PLUS 1 WARRANTY ASKO

ASKO

ASKO Appliances, Inc. • P.O. Box 940609 • Plano, TX 75094-0609

Family Size Dryer - Line Series

T793FI, T783, T753 Vented Dryers

Unit Dimensions

		US	METRIC
HEIGHT		33-1/2”–34-1/2”	850–876 mm
WIDTH		23-1/2”	597 mm
DEPTH:	T753	23-7/8” *	606 mm
	T793FI	23-1/8” **	587 mm
	T783	23-7/8”	606 mm
DEPTH WITH DOOR OPEN:	T753	46-1/8”	1172 mm
	T793FI	47-7/8”	1216 mm
	T783	46-1/8”	1172 mm
WEIGHT		86 lbs	39 kg

**Includes control knob.*
***Does not include accessory door panel.*

Technical Data

Supply voltage	Single-phase 220 V, 60 Hz
Heating element	3000 W

NOTE: *When on a separate outlet, use 220 V, 20 Amp single-phase circuit. When an ASKO washer is connected, use 220 V, 30 Amp single-phase circuit.*

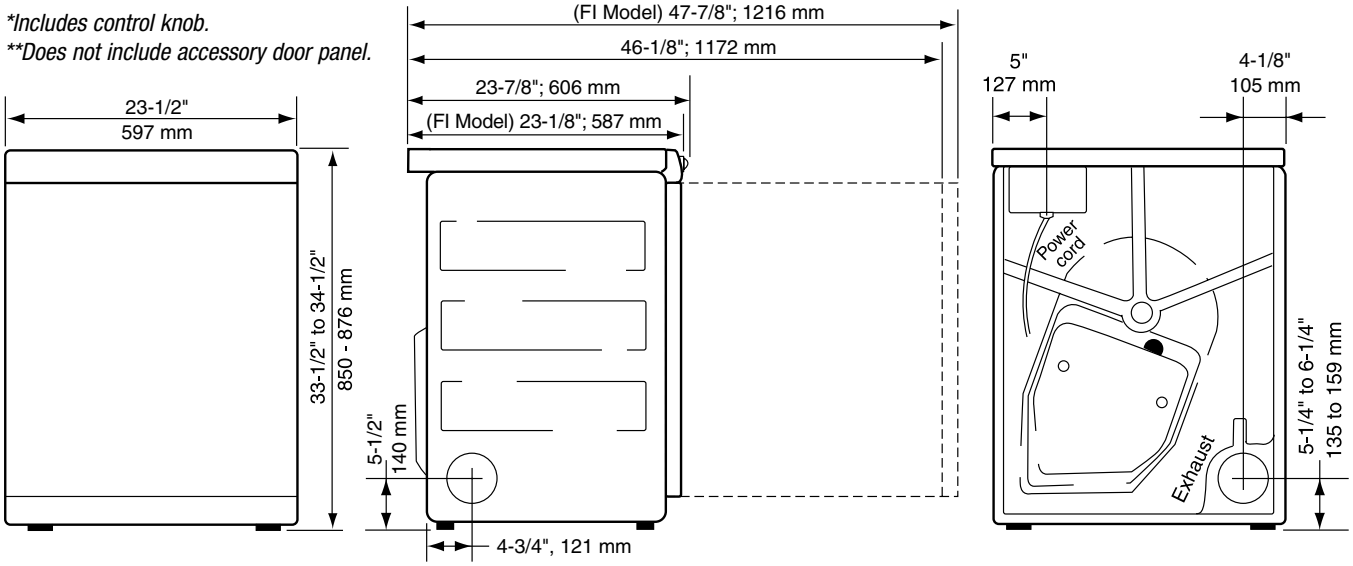

The door hinges on ASKO dryers are shipped left-hinged, but they are reversible. See the *ASKO Dryer Use and Care Guide* for more information.

When placing the dryer next to a wall or cabinet, be sure to leave 1/2” (12 mm) of space between the dryer and the wall or cabinet.

See page 38 for stacked washer/dryer dimensions.

See pages 42-44 for cutout dimensions for closet and under-cabinet installations.

NOTE: *Power cord not supplied with unit.*

Venting Requirements

WARNING! To reduce the risk of fire, vented dryers must be exhausted OUTDOORS or the equivalent.

Never cover the end of the dryer stub or vent hose with anything to catch lint, except for a UL-approved vent basket.

The exhaust hose should be run with as few bends as possible to the point of discharge. Maximum duct length of 60’ is allowed. Make any bends as gentle as possible. A maximum of four 90° bends may be fitted in the hose, otherwise the performance of the dryer will be impeded. Subtract 4’ of duct for each 90° elbow. If more than 20’ of duct is needed, we recommend increasing the diameter of the duct to 6” or 8” (152 mm or 203 mm).

If the exhaust hose is taken to a wall outlet, a ventilation grill should be fitted to prevent reverse flow of cold air. Fit the ventilation grill to the outside or inside of the wall.

This appliance should not be exhausted into a chimney, a wall, a ceiling, or a concealed space of a building. Only a metal ventilation grill should be used.

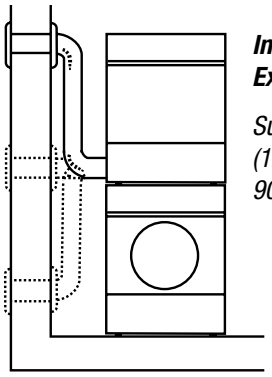

Installation Examples

Subtract 4 feet (122 cm) for every 90° elbow.

Specifications are subject to change without notice. See installation instructions for additional details.