ASKO Logic Dishwasher

D5634XLHS

Type: Built-in
Colors: TouchProof™ stainless steel

PERFORMANCE
Capacity: 14 place settings
Noise level 48 dB(A)
7Spray™ system
PowerZone™ Pots & Pans, PowerZone™ Cutlery

PROGRAMS

Heavy	Super quick	Daily
Quick	Rinse and dry	Delicate
Eco	Rinse & hold	Normal

Super Quick program in 15 minutes!

FEATURES
7 Temperatures, Turbo drying™, Delayed start 1-24 h, Hidden control, LCD display, Front LED display, Towel bar handle, Uses as little at 2.6 gals of water in Quick wash, Energy Star rated, Fits into opening as low as 32 1/4" height, 2 year warranty

FLEXIRACKS™
Premium upper rack accommodates:
- 9" items
- Fold-down stemware shelves
- High-side design to protect dishes and glasses

Exclusive lower rack accommodates:
- 12" dishes
- Fold-down tines for storage flexibility
- Wide tine design for large bowls and platters
- Upper & lower rack handles

Cutlery basket

Asko Appliances, Inc
PO BOX 940609 • Plano • Texas • 75094
Phone 800.898.1879
www.askousa.com

Art. no: 6301708

PLANNING & DESIGN: XL DISHWASHERS

D5424XL, D5524XLFI, D5534XLFI, D5624XLCS, D5634XLHS, D5644XLCS

Unit Dimensions

		US	METRIC
HEIGHT:*		32 ¼″ – 34 ⅜″	819 – 873 mm
WIDTH:	5424XL, 5624XLCS 5634XLHS & 5644XLCS	24″	610 mm
	5524XLFI, 5534XLFI	23 ⅝″	600 mm
DEPTH:		22 ⅞″	581 mm
DEPTH W/HANDLE:		24 ⅞″	632 mm
DEPTH W/DOOR OPEN:		47 ½″	1207 mm
WEIGHT:	5424XL, 5624XLCS, 5634XLHS & 5644XLCS	106 lbs	48 kg
	5524XLFI, 5534XLFI	94 lbs	43 kg

Technical Data

Electricity	120 V, 60 Hz, 15 Amp
Water pressure	4.2 – 140 psi
Heating element	1200 watt
Max loading	1300 watt

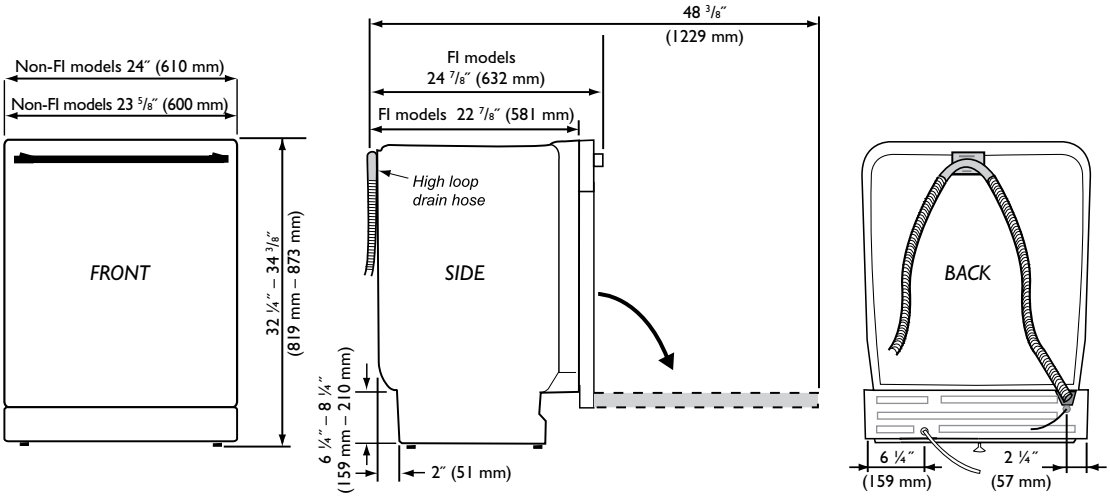

Cutout Dimensions

		US	METRIC
HEIGHT:		32 ¼″ – 34 ½″	819 – 873 mm
WIDTH:	5424XL, 5624XLCS, 5634XLHS & 5644XLCS	24″	610 mm
	5524XLFI, 5534XLFI	23 ⅝″ – 24″	600 – 610 mm
DEPTH:		24″	510 mm

Depth includes space for the high-loop drain hose

The electrical and water supplies should enter through the area indicated by the shaded area. Preferably, they should come through the right side of the machine. The access hole must be round and smooth and no bigger than 2″ (51 mm) in diameter.

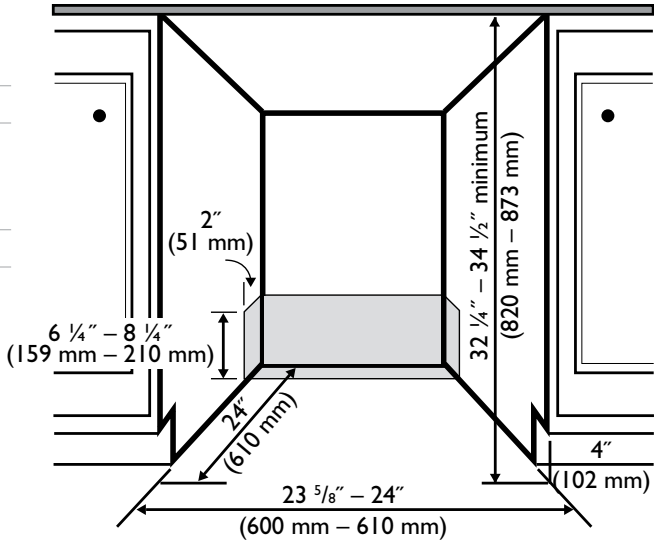

* ***32 ¼″ / 819 mm height requires removal of top trim & lower side trim (2)***

Specifications are subject to change without notice. See installation instructions for additional details.