PLANNING & DESIGN: FAMILY-SIZE WASHERS – LINE SERIES™ CLASSIC

W6424

Unit Dimensions

	US	METRIC
HEIGHT:	33 ½″ – 34 ½″	851 – 876 mm
WIDTH:	23 ½″	597 mm
DEPTH:	23 7/8″	606 mm
DEPTH W/DOOR OPEN:	36″	914 mm
WEIGHT:	172 lbs	78 kg

Technical Data

Supply voltage	Single-phase 220 V, 60 Hz
Water Pressure	15 – 146 psi
Max Wattage	2200 W
Power cord (attached)	220 V, 20 Amp

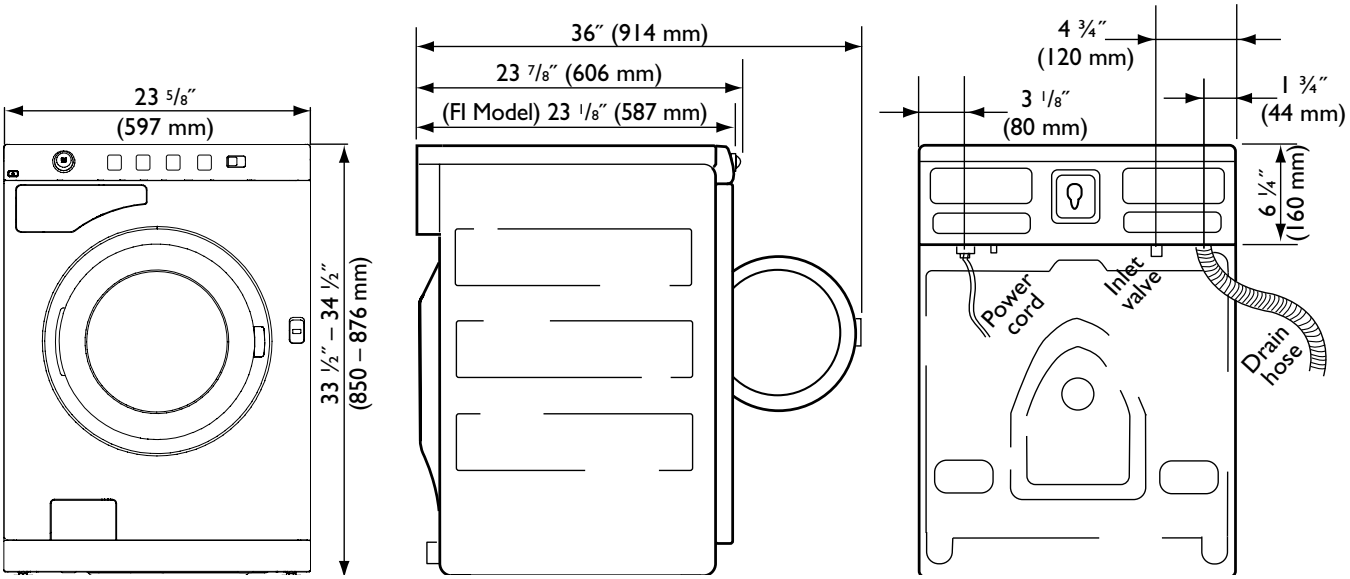

IMPORTANT: ONLY USE THE WATER SUPPLY HOSE PROVIDED WITH THIS MACHINE. ASKO provides a quality PEX water fill hose that utilizes a US standard ¾″ brass connection fitting for attachment on the water supply / faucet side and a Metric threaded fitting for the washer side connection.

Every ASKO washer is delivered ready-fitted with a plug and is intended for connection to an ASKO dryer, which is equipped with a matching receptacle. If the washer is used separately or with another dryer, it must be on a separate 220 V, 20 Amp single-phase circuit.

Second-floor (above grade) installations must meet all local building codes.

When placing the washer next to a wall or cabinet, be sure to leave ¼″ (6 mm) of space between the washer and the wall or cabinet.