ASKO Laundry Care

ASKO

T784

T784W LINE SERIES LOGIC
Type: Family-size vented dryer
Colors: White (W) with reversible side-swing exterior door

PROGRAMS
Auto heavy, Auto normal, Auto delicate, Auto iron dry, Jeans, Synthetic, Auto terry, Auto down, Timed dry, Air fluff

OPTIONS
Anti-Crease, Low temperature, Delay start (24 hrs) and TimeSaver™ cool down

CAPACITY
UltraCare™ – family-size capacity

TECHNOLOGY
Line Series™ Logic control with LCD display, SensiDry™ sensor, Butterfly™ drying system, Double lint filter and Cleanable fan

CONSTRUCTION
Stainless Steel drum, Ball bearing suspension, Heavy duty life-tested motor, 66 dB(A) noise level, Galvanized steel rear panel

ASKO 2 Two year warranty

ENERGY STAR

W6884ECO & T784W

Asko Appliances, Inc
PO BOX 940609 • Plano • Texas • 75094
Phone 800.898.1879
www.askousa.com

Art no: 6301820

PLANNING & DESIGN: FAMILY-SIZE DRYER – LINE SERIES™

T794FI, T784, T754 Vented Dryers

Unit Dimensions

		US	METRIC
HEIGHT:		33 ½″– 34 ½″	851 – 876 mm
WIDTH:		23 ½″	597 mm
DEPTH:	T753	23 7/8″ *	606 mm
	T793FI	23 1/8″ **	587 mm
	T783	23 7/8″ *	606 mm
DEPTH WITH DOOR OPEN:	T753	46 1/8″	1172 mm
	T793FI	47 7/8″	1216 mm
	T783	46 1/8″	1172 mm
WEIGHT:		86 lbs	39 kg

*Includes control knob.
**Does not include accessory door panel.

Technical Data

Supply voltage	Single-phase 220 V, 60 Hz
Max Wattage	3000 W

NOTE: *When on a separate outlet, use 220 V, 20 Amp single-phase circuit. When an ASKO washer is connected, use 220 V, 30 Amp single-phase circuit.*

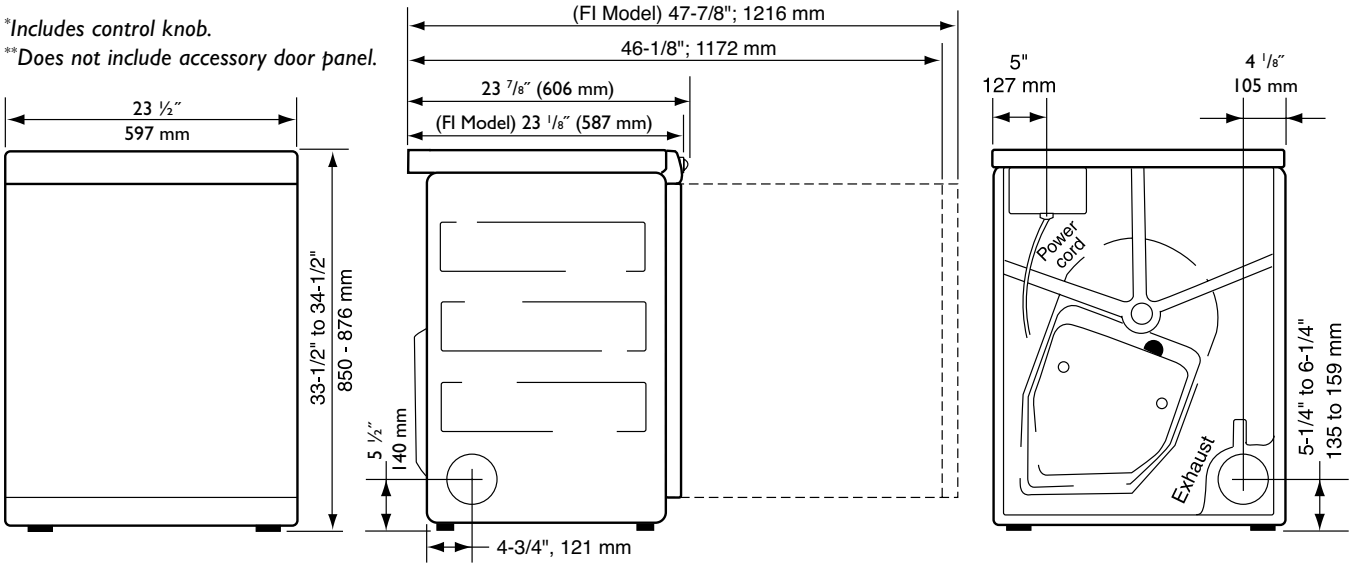

The door hinges on ASKO dryers are shipped left-hinged, but they are reversible. See the *ASKO Dryer Use and Care Guide* for more information.

When placing the dryer next to a wall or cabinet, be sure to leave ¼″ (6 mm) of space between the dryer and the wall or cabinet.

See page 35-36 for stacked washer/dryer dimensions.

See pages 38-40 for cutout dimensions for closet and under-cabinet installations.

NOTE: *Power cord not supplied with unit.*

Venting Requirements

WARNING! To reduce the risk of fire, vented dryers must be exhausted OUTDOORS or the equivalent.

Never cover the end of the dryer stub or vent hose with anything to catch lint, except for a UL-approved vent basket.

The exhaust hose should be run with as few bends as possible to the point of discharge. Maximum duct length of 60′ (1829 cm) is allowed. Make any bends as gentle as possible. A maximum of four 90° bends may be fitted in the hose, otherwise the performance of the dryer will be impeded. Subtract 4′ (122 cm) of duct for each 90° elbow. If more than 20' (210 cm) of duct is needed, we recommend increasing the diameter of the duct to 6″ or 8″ (152 mm or 203 mm).

If the exhaust hose is taken to a wall outlet, a ventilation grill should be fitted to prevent reverse flow of cold air. Fit the ventilation grill to the outside or inside of the wall.

This appliance should not be exhausted into a chimney, a wall, a ceiling, or a concealed space of a building. Only a metal ventilation grill should be used.

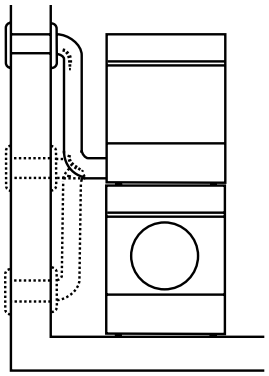

Installation Examples

Subtract 4 feet (122 cm) for every 90° elbow.

Specifications are subject to change without notice. See installation instructions for additional details.